Work Order ID 70050

Thursday, May 26, 2011 7:49:24 AM

Item ID: D3282-041 **Accept** **Setup Start** **Stop**

Revision ID:

Item Name: Float Web (206L/407)

Start Date: 5/26/2011 **Start Qty:** 10.00 **Cust Item ID:**

Required Date: 6/23/2011 **Req'd Qty:** 10.00 **Customer:**

Reference:

Approvals: **Process Plan:** _____ **Date:** 11-05-26 **Tooling:** _____ **Date:** _____ **Run Start** **Stop**

QC: _____ **Date:** _____ **SPC (Y/N):** _____ **Date:** _____

Sequence ID/ Work Center ID	Operation Description	Set Up/ Run Hours	Tool ID	Tool #	Plan Code	Accept Qty	Reject Qty	Reject Number	Insp. Stamp
Draw Nbr	**Revision Nbr**								
D3282	Rev C								
100	Skidtubes	0.00							DL
Skidtubes	**Memo**	0.00							11/05/31
Skidtubes	1-Cut to length as per Dwg D3282. 2- inspect for surface damage as per QSI0018 3- Deburr								
110	HAAS CNC VERTICAL MACHINING #1	0.00				10	Ø		
HAAS 1	**Memo**	0.00							
HAAS CNC vertical machine #1	1-Machine as per Folio FA579 & Dwg D3282 2-Deburr								
120	QC2- Inspect parts off machine FAI/FAIB	0.00				10	Ø		
QC	**Memo**	0.00							
Quality Control									

F.K. 11/06/26

F.K. 11/06/26

Dart Aerospace Ltd

W/O:		WORK ORDER CHANGES					
DATE	STEP	PROCEDURE CHANGE	By	Date	Qty	Approval Chief Eng / Prod Mgr	Approval QC Inspector

Part No: _____ **PAR #:** _____ **Fault Category:** _____ **NCR:** Yes No **DQA:** _____ **Date:** _____

Resolution: _____ **Disposition:** _____ **QA: N/C Closed:** _____ **Date:** _____

NCR:		WORK ORDER NON-CONFORMANCE (NCR)						
DATE	STEP	Description of NC Section A	Corrective Action Section B			Verification Section C	Approval Chief Eng	Approval QC Inspector
			Initial Chief Eng	Action Description Chief Eng	Sign & Date			

NOTE: Date & initial all entries

Work Order ID 70050

Thursday, May 26, 2011 7:49:24 AM

Item ID: D3282-041 **Accept** **Setup Start**

Revision ID: **Stop**

Item Name: Float Web (206L/407)

Start Date: 5/26/2011 **Start Qty:** 10.00 **Cust Item ID:**

Required Date: 6/23/2011 **Req'd Qty:** 10.00 **Customer:**

Reference:

Run Start

Approvals: **Process Plan:** _____ **Date:** _____ **Tooling:** _____ **Date:** _____

Stop

QC: _____ **Date:** _____ **SPC (Y/N):** _____ **Date:** _____

Sequence ID/ Work Center ID	Operation Description	Set Up/ Run Hours	Tool ID	Tool #	Plan Code	Accept Qty	Reject Qty	Reject Number	Insp. Stamp
130	QC8- Inspect parts - second check	0.00	JL 11-08-29						
QC	Memo	0.00							
Quality Control									
140	Chemical Conversion Coat per QSI005 4.1	0.00	SAD 11-09-13			10			
HandFinish	Memo	0.00							
Hand Finishing									
150	QC3- Inspect Part Finish	0.00				10	0	BE 11/09/14	
QC	Memo	0.00							
Quality Control									

Dart Aerospace Ltd

W/O:		WORK ORDER CHANGES					
DATE	STEP	PROCEDURE CHANGE	By	Date	Qty	Approval Chief Eng / Prod Mgr	Approval QC Inspector

Part No: _____ **PAR #:** _____ **Fault Category:** _____ **NCR:** Yes No **DQA:** _____ **Date:** _____

Resolution: _____ **Disposition:** _____ **QA: N/C Closed:** _____ **Date:** _____

NCR:		WORK ORDER NON-CONFORMANCE (NCR)						
DATE	STEP	Description of NC Section A	Corrective Action Section B			Verification Section C	Approval Chief Eng	Approval QC Inspector
			Initial Chief Eng	Action Description Chief Eng	Sign & Date			

NOTE: Date & initial all entries

H:\fFORMS\Quality Assurance\approved QA\NCRWO RevE

Work Order ID 70050

Thursday, May 26, 2011 7:49:24 AM

Item ID: D3282-041 **Accept** **Setup Start** **Stop**

Revision ID:

Item Name: Float Web (206L/407)

Start Date: 5/26/2011 **Start Qty:** 10.00 **Cust Item ID:**

Required Date: 6/23/2011 **Req'd Qty:** 10.00 **Customer:**

Reference:

Run Start **Stop**

Approvals: **Process Plan:** _____ **Date:** _____ **Tooling:** _____ **Date:** _____

QC: _____ **Date:** _____ **SPC (Y/N):** _____ **Date:** _____

Sequence ID/ Work Center ID	Operation Description	Set Up/ Run Hours	Tool ID	Tool #	Plan Code	Accept Qty	Reject Qty	Reject Number	Insp. Stamp
160	Skidtubes	0.00							
Skidtubes	**Memo**	0.00			SAD 11-09-16	10			
Skidtubes	1-Install doublers as per Dwg D3282. Apply LPS-3 between doublers and web A/RN/ALPS-3 V16551								
170	QC5- Inspect part completeness to step on W/O	0.00							
QC	**Memo**	0.00			8 11/02/16	XXO			
Quality Control									
180	Identify as per dwg & Stock Location: LG	0.00							
Packaging	**Memo**	0.00				XXO		11/02/16	
Packaging									

Dart Aerospace Ltd

W/O:		WORK ORDER CHANGES					
DATE	STEP	PROCEDURE CHANGE	By	Date	Qty	Approval Chief Eng / Prod Mgr	Approval QC Inspector

Part No: _____ **PAR #:** _____ **Fault Category:** _____ **NCR:** Yes No **DQA:** _____ **Date:** _____

Resolution: _____ **Disposition:** _____ **QA: N/C Closed:** _____ **Date:** _____

NCR:		WORK ORDER NON-CONFORMANCE (NCR)						
DATE	STEP	Description of NC Section A	Corrective Action Section B			Verification Section C	Approval Chief Eng	Approval QC Inspector
			Initial Chief Eng	Action Description Chief Eng	Sign & Date			

NOTE: Date & initial all entries

Work Order ID 70050

Thursday, May 26, 2011 7:49:25 AM

Item ID: D3282-041 **Accept** **Setup Start**

Revision ID:

Item Name: Float Web (206L/407) **Stop**

Start Date: 5/26/2011 **Start Qty:** 10.00 **Cust Item ID:**

Required Date: 6/23/2011 **Req'd Qty:** 10.00 **Customer:**

Reference:

Run Start

Approvals: **Process Plan:** _____ **Date:** _____ **Tooling:** _____ **Date:** _____

Stop

QC: _____ **Date:** _____ **SPC (Y/N):** _____ **Date:** _____

Sequence ID/ Work Center ID	Operation Description	Set Up/ Run Hours	Tool ID	Tool #	Plan Code	Accept Qty	Reject Qty	Reject Number	Insp. Stamp
190	QC21- Final Inspection - Work Order Release	0.00					11/9/19		
QC Quality Control	Memo	0.00							

MF 11-09-19

Dart Aerospace Ltd

W/O:		WORK ORDER CHANGES					
DATE	STEP	PROCEDURE CHANGE	By	Date	Qty	Approval Chief Eng / Prod Mgr	Approval QC Inspector

Part No: _____ **PAR #:** _____ **Fault Category:** _____ **NCR:** Yes No **DQA:** _____ **Date:** _____

Resolution: _____ **Disposition:** _____ **QA: N/C Closed:** _____ **Date:** _____

NCR:		WORK ORDER NON-CONFORMANCE (NCR)						
DATE	STEP	Description of NC Section A	Corrective Action Section B			Verification Section C	Approval Chief Eng	Approval QC Inspector
			Initial Chief Eng	Action Description Chief Eng	Sign & Date			

NOTE: Date & initial all entries

H:\fFORMS\Quality Assurance\approved QA\NCRWO RevE

Picklist Print

Thursday, May 26, 2011 7:49:32 AM

Work Order ID: 70050

Parent Item: D3282-041

Parent Item Name: Float Web (206L/407)

Start Date: 5/26/2011 **Required Date:** 6/23/2011

Start Qty: 10.00 **Required Qty:** 10.00

Comments: IPP Rev:B□05.09.23□Procedure change□KJ/JLM□

Component Item ID/ Item Name	Replacement Item ID	Mfg/ Purch	Bin Item	Primary Location	Last Location	Route Seq ID	Unit of Measure	Qty on Hand	Qty per Kit	Total Qty	Qty Issued	Date Issued	Status
MS20470AD4-7		Purchased	No			100	Each	1,872.000	57	570	SAD	11-09-16	
Rivet, Universal Head													
				Location			**Loc Qty**		**Loc Code**				
				ST320	M117387		1872			461			
					116081		572						
					117423		1300			109			
D2792-130		Manufactured	No			160	Each	19.0000	1	10			Ob. 11/05/31
EXTRUSION													
				Location			**Loc Qty**		**Loc Code**				
				HALL			19						
					61630		19			10			
D3283-1		Manufactured	No			160	Each	55.0000	2	20	SAD	11-09-16	
Doubler													
				Location			**Loc Qty**		**Loc Code**				
				ST045			29						
					66947		29			20			
				ST048			26						
					66553		26						

Dart Aerospace Ltd

W/O:		WORK ORDER CHANGES					
DATE	STEP	PROCEDURE CHANGE	By	Date	Qty	Approval Chief Eng / Prod Mgr	Approval QC Inspector

Part No: _____ **PAR #:** _____ **Fault Category:** _____ **NCR:** Yes No **DQA:** _____ **Date:** _____

Resolution: _____ **Disposition:** _____ **QA: N/C Closed:** _____ **Date:** _____

NCR:		WORK ORDER NON-CONFORMANCE (NCR)						
DATE	STEP	Description of NC Section A	Corrective Action Section B			Verification Section C	Approval Chief Eng	Approval QC Inspector
			Initial Chief Eng	Action Description Chief Eng	Sign & Date			

NOTE: Date & initial all entries

H:\fFORMS\Quality Assurance\approved QA\NCRWO RevE

DART AEROSPACE LTD	Work Order:	70050
Description: Float Web	Part Number:	D3282-041
Inspection Dwg: D3282 **Rev:** C		Page 1 of 1

FIRST ARTICLE INSPECTION CHECKLIST

[X] First Article [ ] Prototype

Drawing Dimension	Tolerance	Actual Dimension	Accept	Reject	Method of Inspection	Comments
126.6	+/-0.100	126.6				
1.500	+/-0.010	1.500				
3.000	+/-0.010	3.000				
6.000	+/-0.010	6.000				
1.250	+/-0.010	1.250				
30.000	+/-0.010	30.000				
1.500	+/-0.010	1.500				
72.01	+/-0.030	72.01				
61.75	+/-0.030	61.75				
57.50	+/-0.030	57.500				
49.19	+/-0.030	49.188				
43.94	+/-0.030	43.937				
39.69	+/-0.030	39.687				
26.68	+/-0.030	26.687				
0.55	+/-0.030	.550				
1.970	+/-0.010	1.979				
2.38	+/-0.030	2.378				
0.05	+/-0.030	.048				

Measured by:	FK	Audited by:	JL	Prototype Approval:	N/A
Date:	11/08/24	Date:	11-08-29	Date:	N/A

Rev	Date	Change	Revised by	Approved
A	07.04.02	New Issue	KJ/JLM	

Same as previous batch.

Dart Aerospace Ltd

W/O:		WORK ORDER CHANGES					
DATE	STEP	PROCEDURE CHANGE	By	Date	Qty	Approval Chief Eng / Prod Mgr	Approval QC Inspector

Part No: _____ **PAR #:** _____ **Fault Category:** _____ **NCR:** Yes No **DQA:** _____ **Date:** _____

Resolution: _____ **Disposition:** _____ **QA: N/C Closed:** _____ **Date:** _____

NCR:		WORK ORDER NON-CONFORMANCE (NCR)						
DATE	STEP	Description of NC Section A	Corrective Action Section B			Verification Section C	Approval Chief Eng	Approval QC Inspector
			Initial Chief Eng	Action Description Chief Eng	Sign & Date			

NOTE: Date & initial all entries

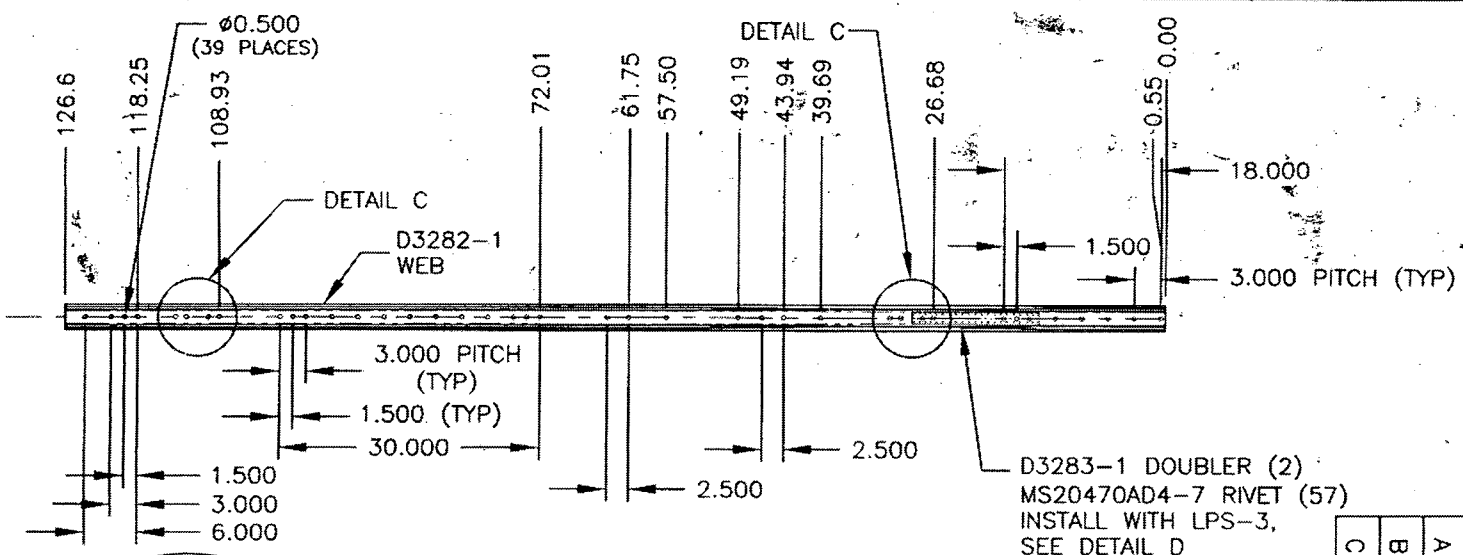

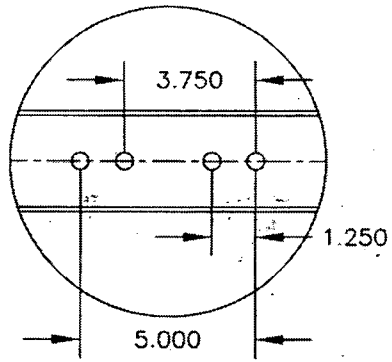

DETAIL C
SCALE 1:5
RIVET HOLES NOT SHOWN
FOR CLARITY

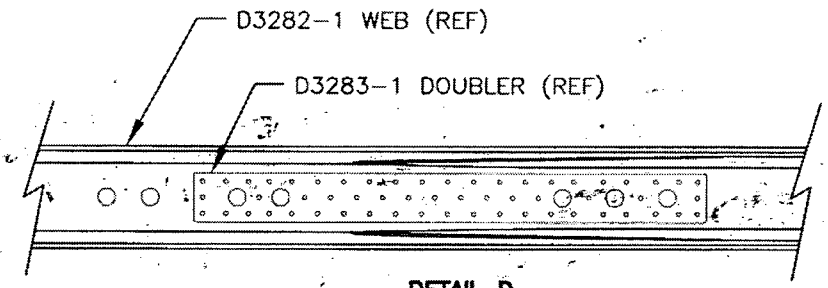

DETAIL D
SCALE 1:5

D3282-041 FLOAT WEB

1) MAKE FROM D2792-130 EXTRUSION
2) FINISH: CHEMICAL CONVERSION COAT PER DART QSI 005 4.1
3) TOLERANCES ARE PER DART QSI 018 UNLESS OTHERWISE NOTED
4) BREAK ALL SHARP EDGES 0.010 TO 0.020
5) APPLY A LAYER OF LPS LABORATORIES' LPS-3 BETWEEN D3283-1 DOUBLERS AND D3282-1 WEB. INSTALL RIVETS COATED WITH LPS-3
6) SEE PAGE 2 FOR MACHINING DETAILS

RELEASED
05-11-12

A	04.05.05	NEW ISSUE
B	05.03.16	MOVE HOLES, ADD D3390-1 DOUBLERS
C	05.08.09	REMOVE D3390-1, NOW MACHINED

SHOP COPY
RETURN TO
ENGINEERING
UNCONTROLLED COPY
SUBJECT TO AMENDMENT
WITHOUT NOTICE
WORK ORDER
NO. 70050
RJ 11-05-26

DESIGN	DRAWN BY	DATE	TITLE	SCALE
CP	CP	05.08.09	FLOAT WEB, 206L/407	1:20
CHECKED	APPROVED		DRAWING NO. D3282	REV. C
				SHEET 1 OF 2

DART AEROSPACE USA, INC.
PORT HADLOCK, WA

Dart Aerospace Ltd

W/O:		WORK ORDER CHANGES					
DATE	STEP	PROCEDURE CHANGE	By	Date	Qty	Approval Chief Eng / Prod Mgr	Approval QC Inspector

Part No: _____ **PAR #:** _____ **Fault Category:** _____ **NCR:** Yes No **DQA:** _____ **Date:** _____

Resolution: _____ **Disposition:** _____ **QA: N/C Closed:** _____ **Date:** _____

NCR:		WORK ORDER NON-CONFORMANCE (NCR)						
DATE	STEP	Description of NC Section A	Corrective Action Section B			Verification Section C	Approval Chief Eng	Approval QC Inspector
			Initial Chief Eng	Action Description Chief Eng	Sign & Date			

NOTE: Date & initial all entries

SECTION A–A

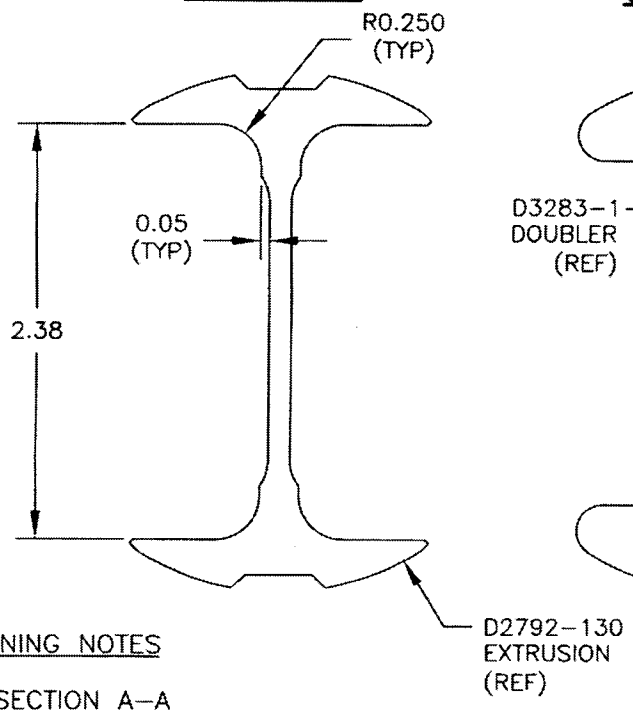

SECTION B–B

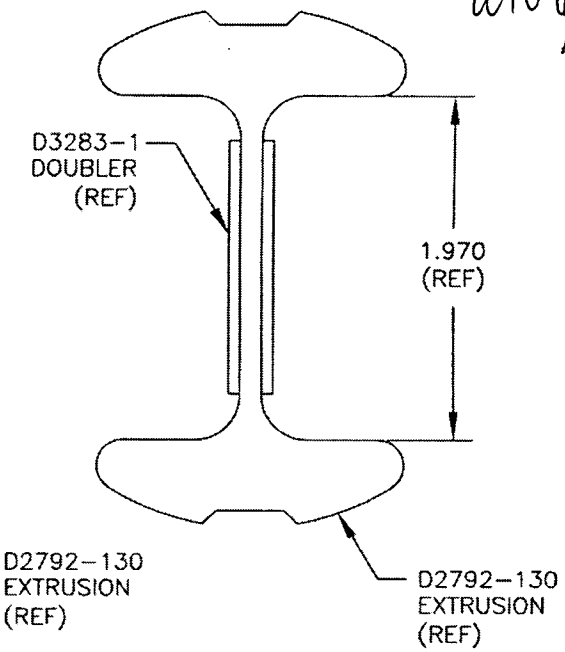

w/o ~~#0050~~
70050

D3282–1 MACHINING NOTES

1. UNIFORM SECTION A–A
2. UNIFORM TAPER FROM SECTION A–A TO SECTION B–B
3. UNIFORM SECTION B–B
4. UNIFORM TAPER FROM SECTION B–B TO SECTION A–A
   DRILL #30 (Ø0.128 REF) HOLES (57 PLACES) TO LINE UP WITH D3283–1,
   SEE DETAIL D FOR REFERENCE
5. UNIFORM SECTION A–A

6 R1.00 BETWEEN SECTIONS

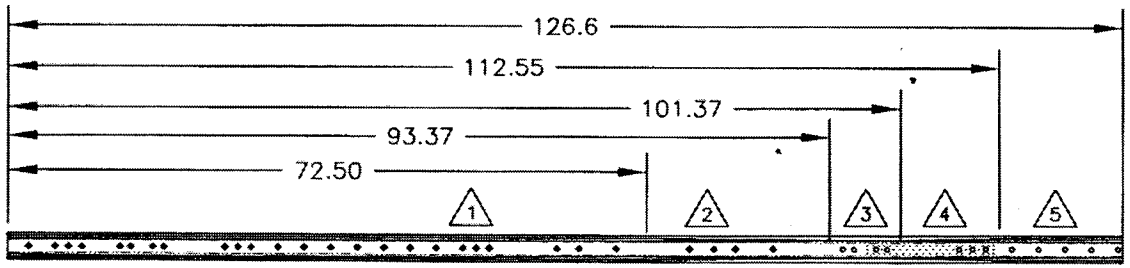

RELEASED
05-04-12

DESIGN CP	DRAWN BY CP	DART AEROSPACE USA, INC. PORT HADLOCK, WA	
CHECKED	APPROVED	DRAWING NO. D3282	REV. C
DATE 05.08.09		TITLE FLOAT WEB, 206L/407	SHEET 2 OF 2
			SCALE 1:20

Dart Aerospace Ltd

W/O:		WORK ORDER CHANGES					
DATE	STEP	PROCEDURE CHANGE	By	Date	Qty	Approval Chief Eng / Prod Mgr	Approval QC Inspector

Part No: _____ **PAR #:** _____ **Fault Category:** _____ **NCR:** Yes No **DQA:** _____ **Date:** _____

Resolution: _____ **Disposition:** _____ **QA: N/C Closed:** _____ **Date:** _____

NCR:		WORK ORDER NON-CONFORMANCE (NCR)						
DATE	STEP	Description of NC Section A	Corrective Action Section B			Verification Section C	Approval Chief Eng	Approval QC Inspector
			Initial Chief Eng	Action Description Chief Eng	Sign & Date			

NOTE: Date & initial all entries

H:\fFORMS\Quality Assurance\approved QA\NCRWO RevE